DATA ITEM DESCRIPTION

Title: Functional Flow Diagrams

Number: DI-SESS-81224A
AMSC Number: 10091
DTIC Applicable: No
Preparing Activity: MI
Applicable Forms: N/A

Approval Date: 20190916
Limitation: N/A
GIDEP Applicable: No
Project Number: SESS-2019-048

Use/relationship: The Functional Flow Diagrams are a portrayal of the functions, which shall be met to satisfy total system needs, and thus represent the beginning of subsequent detail requirements determination. These diagrams are drawings to be used as an integral part of the systems engineering documentation process. The functional description also aids in developing, interpreting, and providing standardization necessary to accomplish interfaces between contractors.

a. This Data Item Description (DID) contains the format, content, and intended use information for the data deliverable resulting from the work task described in the solicitation.

b. This DID is used when a multi-contractor relationship exists, and there is a need for commonality of this data among the contractors.

c. This DID supersedes DI-GDRQ-81224.

Requirements:

1. Reference Documents. None.

2. Format. The Functional Flow Diagrams format shall be in accordance with section 3 below.

3. Content. The Functional Flow Diagrams content shall be as follows:

3.1 Functioning numbering. Functions on the top-level functional flow diagrams shall be numbered 1.0, 2.0, 3.0, etc. Functions which further indenture these top functions shall contain the same parent identifier and shall be coded at the next decimal level for each indenture. For example, the first indentured function 3.0 would be 3.1, the second 3.1.1, the third 3.1.1.1, etc. In expansion of a higher level function within a particular level of indenture, a numerical sequence shall be used to preserve the continuity of function. For example, if more than one function is required to amplify the function 3.0 at the first level of indenture, the sequence shall be 3.1, 3.2, 3.3, ….3.n. In expansion of function 3.3 at the second level, the numbering shall be 3.3.1, 3.3.2, 3.3.n. Where several levels of indenture appear on a single functional diagram, the same pattern shall be maintained. The basic ground rule shall be to maintain a minimum level of

Source: http://assist.dla.mil -- Downloaded: 2023-11-14T22:54Z
Check the source to verify that this is the current version before use.

indenture of any one particular flow. The criteria for the number of functions and levels of indenture appearing on any particular flow shall be accuracy and clarity of presentation based on judgement.

3.2 Function reference. The functional flow diagrams shall contain a reference to its next higher functional diagram through the use of a reference block. For example, function 4.3 shall be shown as a reference block in the case where the functions 4.3.1, 4.3.2, 4.3.n, are being used to expand function 4.3. Reference blocks shall also be used to indicate interfacing functions, as appropriate.

3.3 Function box. Each separate function on the functional flow diagrams shall be presented in a single box enclosed by a solid line as depicted in Figure 1. Boxes used for reference to other flows shall be indicated as a partially enclosed box to be labeled "Ref." Each function shall be as gross or detailed as required by the level of functional diagram on which it appears, but it shall stand for a definite, finite, discrete action to be accomplished by equipment, personnel, facilities, or any combination of the three. Provisional or tentative functions shall be enclosed in dotted boxes as depicted by Figure 1.

3.4 Flow connection. Lines connecting functions shall indicate only the functional flow and shall not represent either a lapse in time or any intermediate activity. In indicating the flow, vertical and horizontal lines between boxes shall indicate that all functions so interrelated must be performed in either a parallel or series sequence. Diagonal lines shall be used to indicate alternate sequences (i.e., cases where alternate paths lead to the next function in the sequence). In this case, the use of a diagonal line shall indicate that any of the interrelated functions shall lead to the next indicated function.

3.5 Flow direction. Functional flow diagrams shall be laid out so that the functional flow is from left to right and the reverse flow, in the case of a functional loop, is from right to left. Primary input lines shall enter the function box from the left side, the primary output or "go" line shall enter from the right, and the "no go" line shall enter from the bottom of the box.

3.6 Summing gates. A circle shall be used to depict a summing gate. Lines shall enter or exit each summing gate, as appropriate (reference Figure 1). A summing gate is used to indicate the convergence or divergence of parallel or alternate functional paths and is annotated with the terms "AND" or "OR," respectively. The term "AND" shall be used to indicate that parallel functions leading into a gate must be accomplished before proceeding into the next function or that paths emerging from the "AND" gate must be accomplished after the preceding function. The term "OR" shall be used to indicate that any of several alternate paths (i.e., alternate functions) converge to or diverge from the "OR" gate. The "OR" gate, thus, indicates that alternate paths shall lead to or follow a particular function.

3.7 GO/NO paths. The symbols "G" and "NG" shall be used to indicate "GO" and "NO GO" paths, respectively. The symbols shall be entered adjacent to the lines leaving a particular function to indicate alternate functional paths. (Reference Figure 1 function 4.3.7).

Source: http://assist.dla.mil -- Downloaded: 2023-11-14T22:54Z
Check the source to verify that this is the current version before use.

3.8 Numbering procedures for changes to functional flow diagrams. Additions of functions to existing functional flow diagrams shall be accomplished by locating the new function in its correct position without regard to existing sequence of numbering. The new function shall be numbered using the first unused number at the level of indenture appropriate for the new function.

Example:

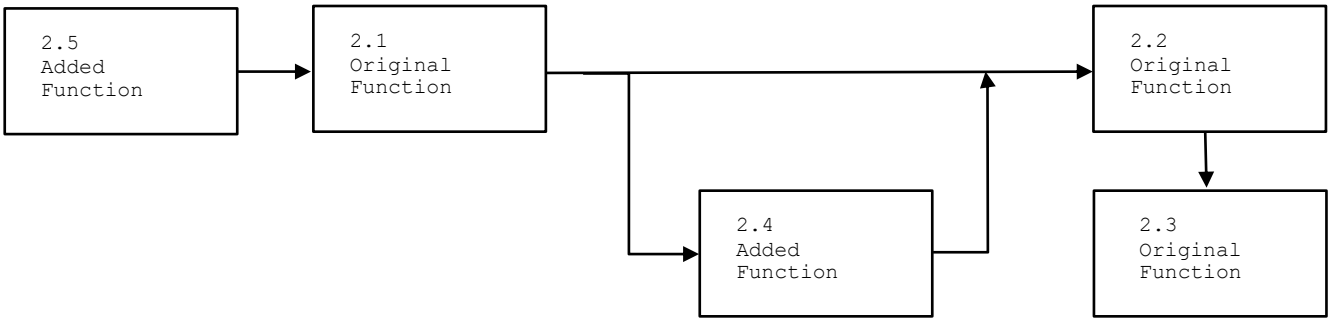

When previously established functions must be re-delegated to a different functional string, the function to be moved shall be considered retired and the new location of that function shall be considered as a new addition to the acquiring strings and shall be treated above.

Example:

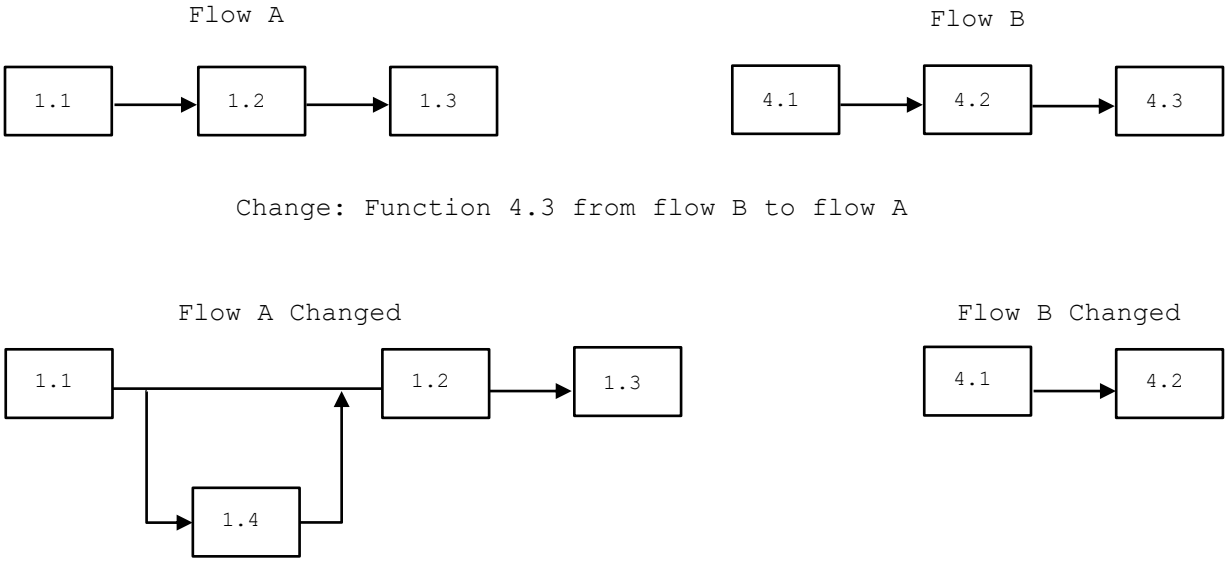

Source: http://assist.dla.mil -- Downloaded: 2023-11-14T22:54Z
Check the source to verify that this is the current version before use.

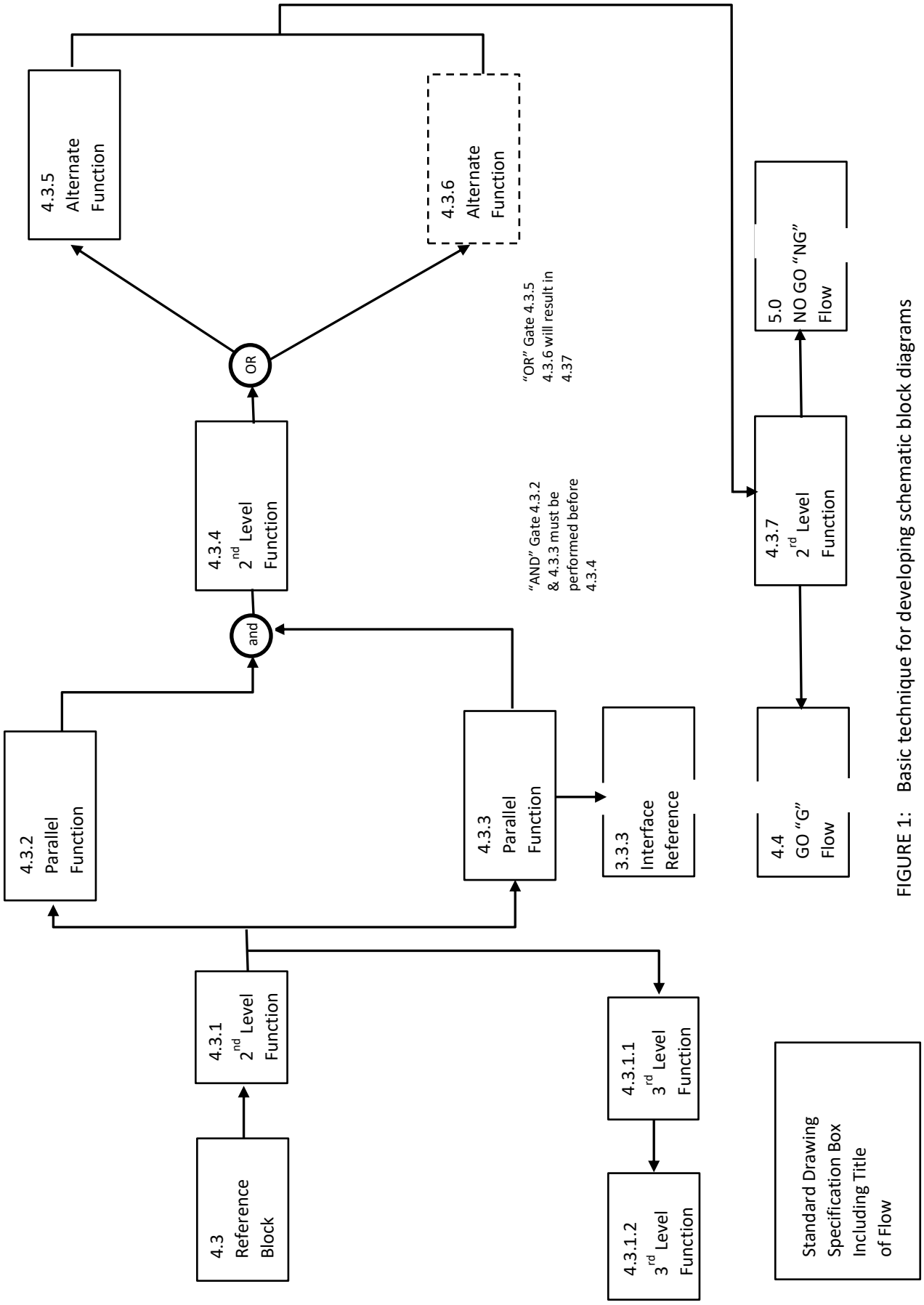

FIGURE 1: Basic technique for developing schematic block diagrams

End of DI-SESS-81224A

Source: http://assist.dla.mil -- Downloaded: 2023-11-14T22:54Z
Check the source to verify that this is the current version before use.